QP-300

Thermal Receipt Printer

Quick Installation Guide

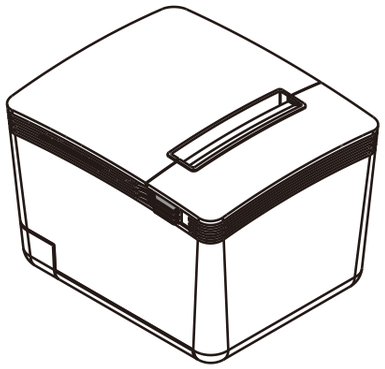

CE FC

Product Overview

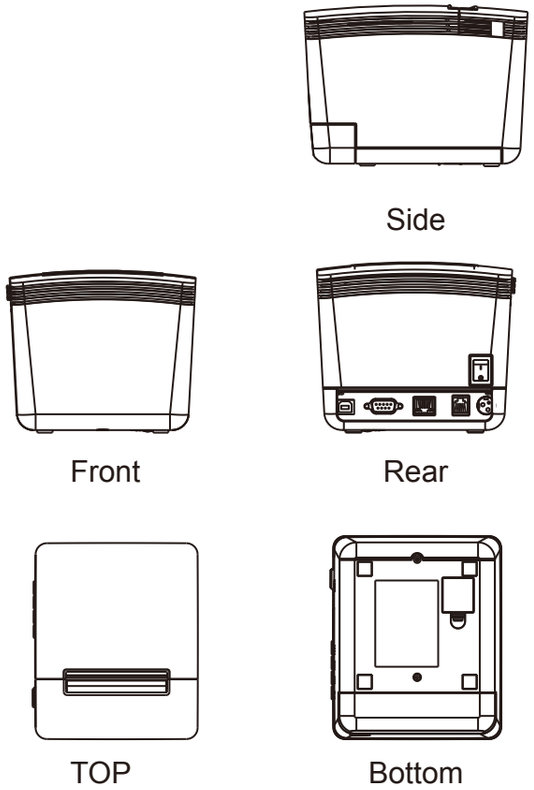

Installing your Printer

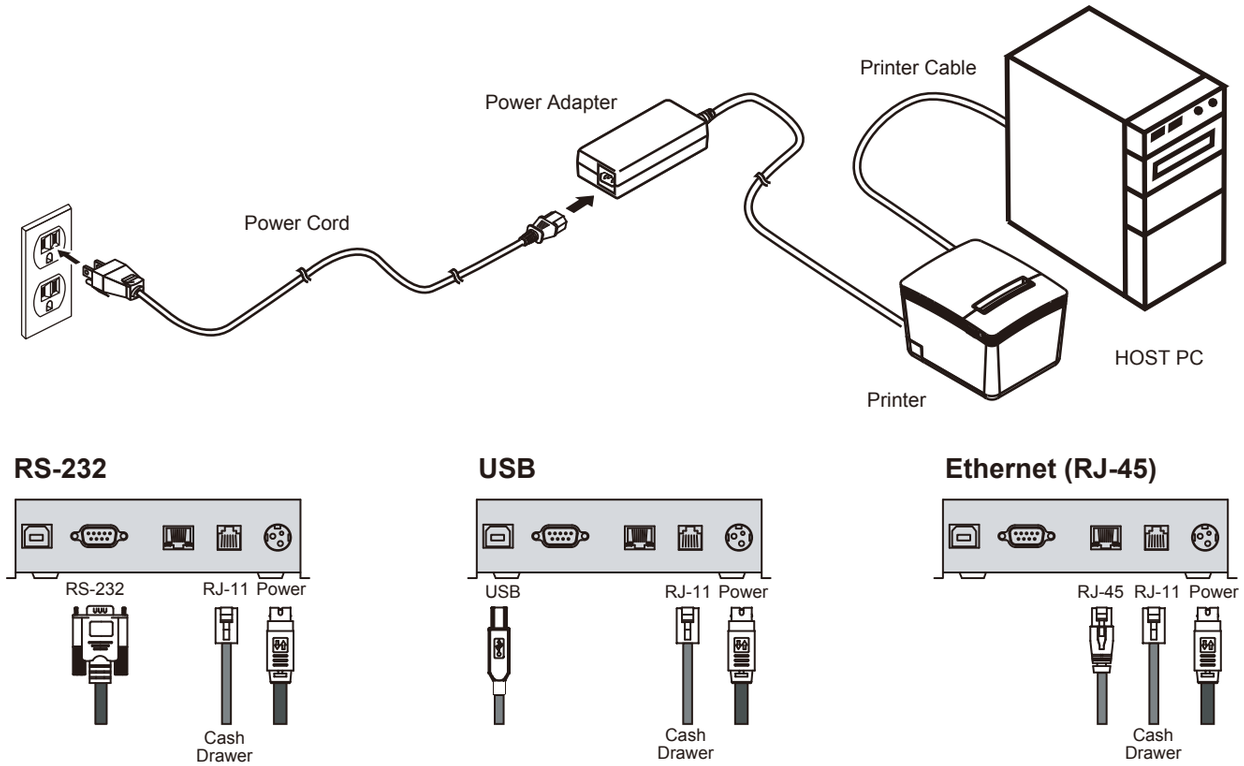

Specification

General		
Print Method		Thermal line printing
Print Speed		250mm/sec
Print Life		100 Km
Print Font	**(ASCII Mode)**	ANK Font. Font A: 12 x 24 dots, Font B: 9 x 17 dots
	Graphic Font)	Chinese Character: 24 x 24 dots
Print Resolution		576 dots/line or 512 dots/line
Print Font Character Support		International Font, Big 5 Chinese, GB Chinese, Japanese, Korean selectable
Character Per Line		48 (Font A) / 64(Font B)
Effective Print Width		72mm
Paper Width		79.5mm± 0.5mm
Paper Roll Diameter		≦ 83mm
Paper Thickness		0.06~0.08mm
Driver		Win 9X/Win ME/Win 2000/ Win 2003/Win NT/Win XP/Win Vista/Win 7/Win 8, compatible with EPSON and SAMSUNG
Print Command		ESC/POS print commands set
Buffer	**Receipt**	128K bytes
	User-Defined	128K bytes
	NV Flash	256K bytes
Interface		
I/O Interface		Multi I/O Interface (Serial +Ethernet +USB)
Cash Drawer		DC 24V/1A, 6-Wire RJ-11
Notification		
Indicator		Audio and LED Indicators
Auto Cutter		Partial
Paper End Notice		Yes
Over-Heat Halt-on Protection		**Yes**
Others		
Power Input		24VDC/2.5A (External Adapter: 100~240VAC 50/60Hz)
Color		Black / White
Compliance		FCC / CE / WEEE / RoHS
Weight		1200g (without cable)
Dimension (mm)		174(L) x 144(W) x 124(H)
Operating Temperature		0°C~45°C
Operating Humidity		10% ~ 80% RH, non-condensing
Storage Temperature		-10°C~ 60°C
Storage Humidity		10% ~ 90% RH non-condensing

Contents

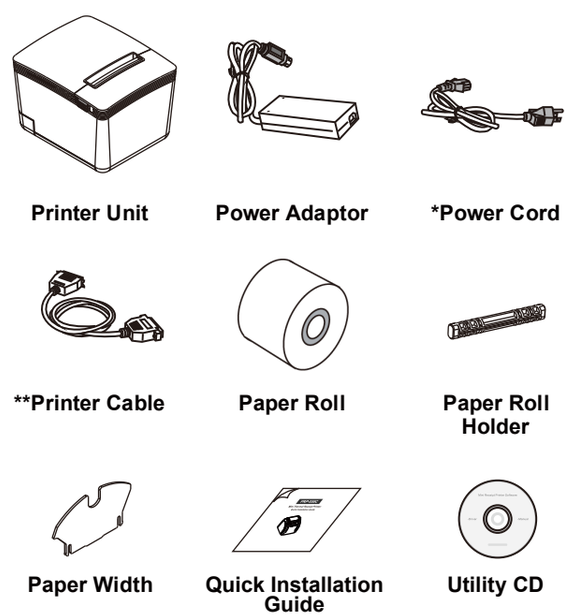

* Power Cord is selectable depending on the types of electrical plug.
** Printer cable is selectable depending on the interface required (RS-232, USB, RJ-45 or Parallel).
Please refer to the nearest local representatives for further information.

Installing the Paper Roll

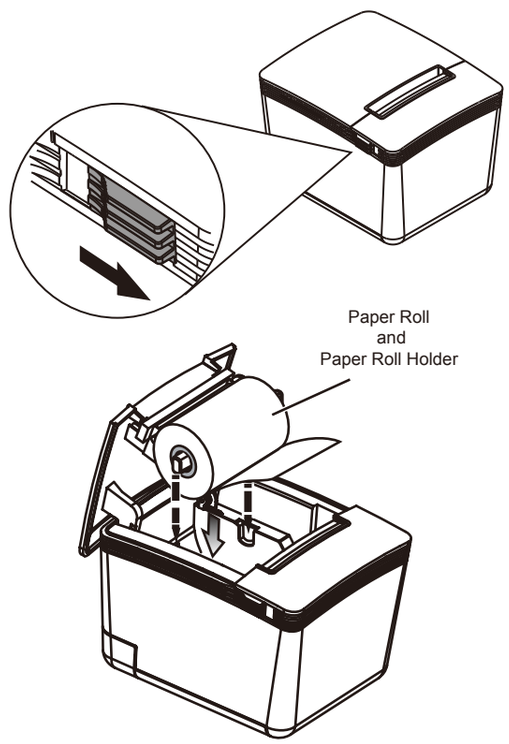

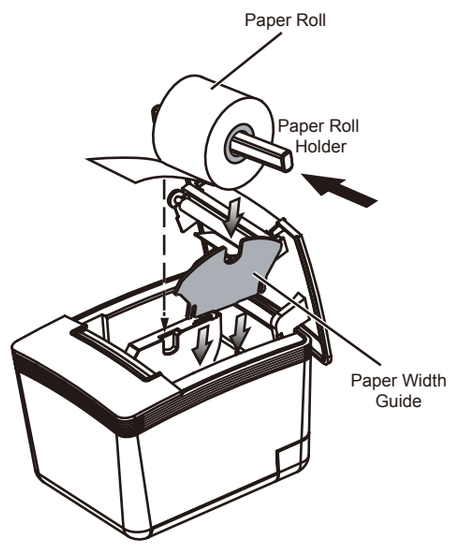

Installing the Driver of The Printer

1. Place the supplied Utility CD into the CD-ROM drive.

2. Browse the CD and open the folder “Driver”.

3. Select the subfolder “Driver for Windows”.

Select the subfolder to access the driver.

4. Double click the icon “PRPDRVEN.EXE” to initiate the installation.

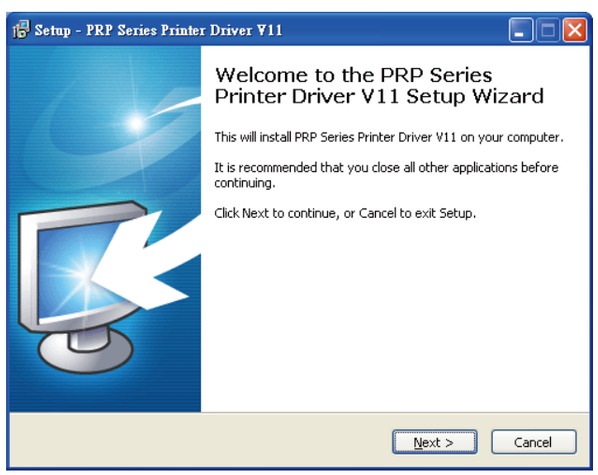

5. Select the Operating System.

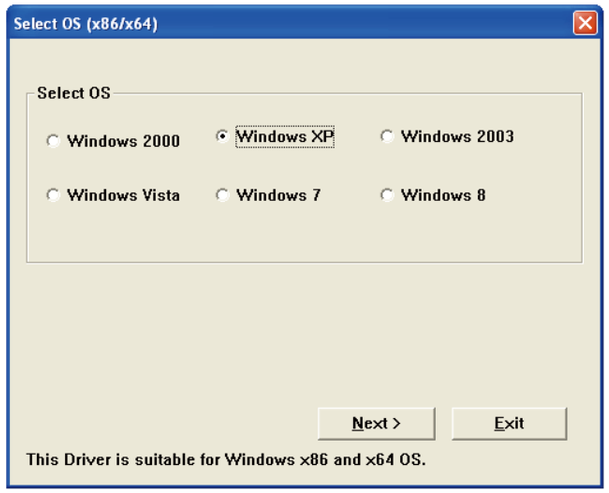

6. Select the proper Printer Model Number.

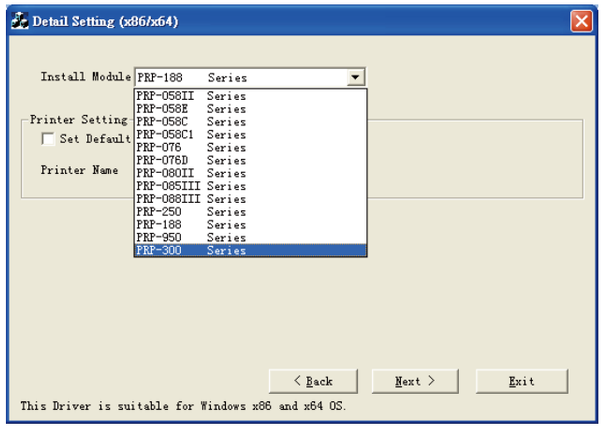

7. Printer Interface Setting:
   Select the communication interface
   (COM port number or LPT port number).
   Click “Install” to complete the installation.

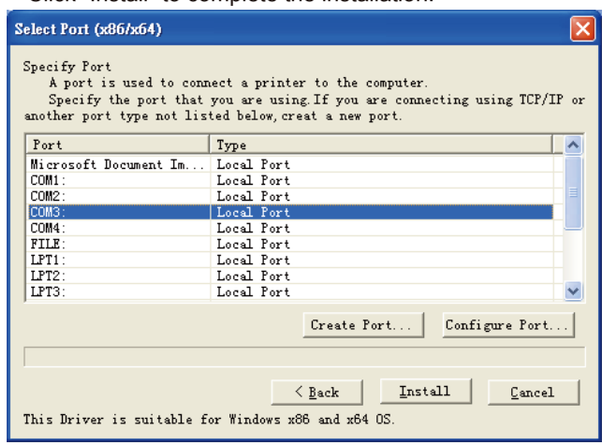

8. Click “Finish” to exit the menu.

9. Port Setting:
   Remember to access the properties of your printer (Start>>Printers and Faxes>> and double-click the icon to enter).
   Make sure the port of printer is correctly configured.

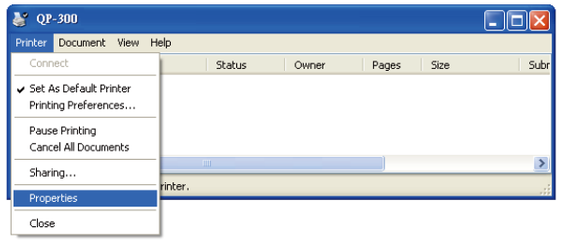

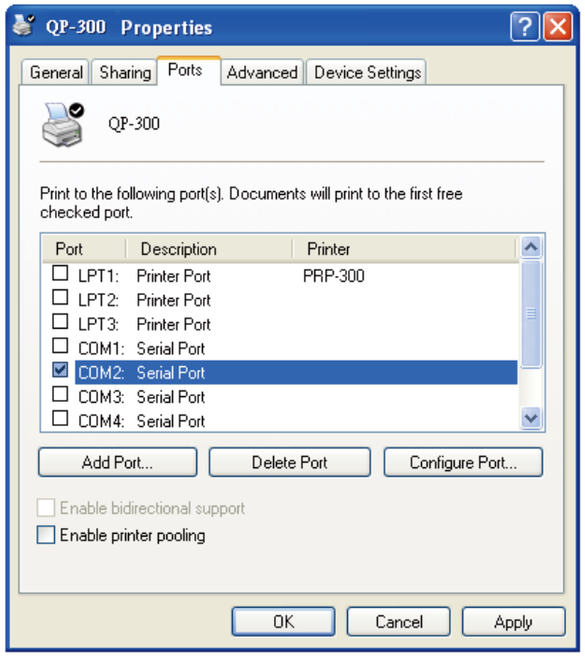

Note:
For USB Interface Installation
Please install the Virtual COM driver before installing the printer driver.
Please refer to the Instruction Manual for further information.

DIP Switch Configuration

To change the setting of the printer manually:

1. Turn off the printer.
2. Remove the protective cover of the DIP Switches.
3. Adjust the DIP switches to configure the printer.

DIP Switches

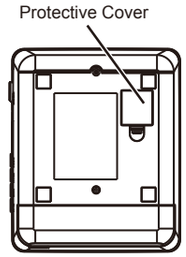

DIP	Function	ON	OFF
1	Paper Cutter	No	Yes*
2	Audio Alarm	Yes *	No
3	Print Density	Dark	Light *
4	Two-byte Character Code	*No	Yes
5	Character Per Line	42	48 *
6	Cutter with Cash Drawer	Yes	No *
7 & 8	Baud Rate Setting	---	OFF*

Baud Rate Setting

19200
(*Default)

9600

115200

38400

Ver. 1.0
20150410
IM-MANU-PRP-300-PKL-EP